Installation instructions for roofing EUREKO MODERNA

EUREKO MODERNA is a modern roofing material made of plastic. It is placed on a roof slat with **6x4 cm** dimension, or on a full hatch made of planks or OSB 3 boards with 20 mm thickness and a maximum 20% humidity. Laying is always carried out using high-quality waterproofing film. The type of foil depends on the composition of the roof cladding and the recommendations of the implementing company. The **minimum** safe **inclination** is **20°**. When laying, we proceed **from** the **bottom up** and **from** the **left to the right** as with other roofing materials. The roofing is walkable, light about **6kg/m2**, resistant to wind, hail, frost, mosses and lichens, UV radiation. The roofing does not smell, does not contain any harmful substances and does not react negatively to any impregnations, copper, acid rain, etc. The warranty for frost resistance and water-impermeability of the roofing is **30 years** see **warranty** conditions for www.eureko.org.

A detailed **description** of the roofing is shown on **Figure 1**

Fig. 1

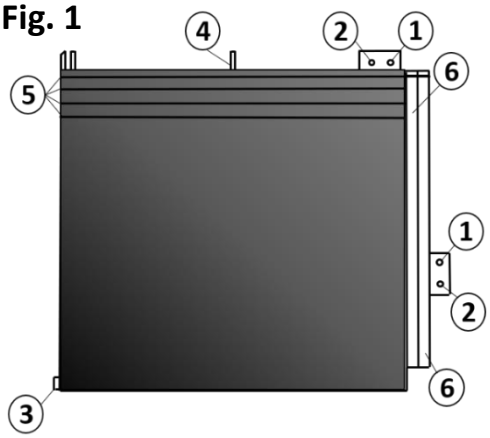

1) Main mounting hole
2) Spare mounting hole
3) Water groove lock
4) Replacement rib for half-pattern
5) Water rise barriers
6) Double water groove

Laying

Row measurement

The slat for the ridge and the first slat at the gutter will be slats 5 x 3 cm rotated by 90°. The slat for the ridge is approximately 3 cm from the end of the counter-slat. Its exact location may vary depending on the roof slope and it is therefore suitable to specify its distance by attaching a ridge. Other slats are already **standard 6x4 cm**. The last slat touches the slat for the ridge to achieve maximum overlap.

The mounting hole at the bottom of the roofing is **always 21 cm** from the mounting hole at the top. Clearance for slatting is **+-1 cm**. During the slating, it is suitable to remember this and adjust the overall length of the roof. If the roof cannot be adjusted to whole rows, it will be necessary to shorten the last row under the ridge.

Fig. 2

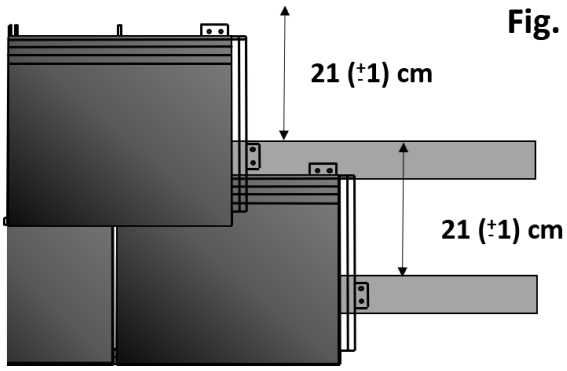

Fig. 3

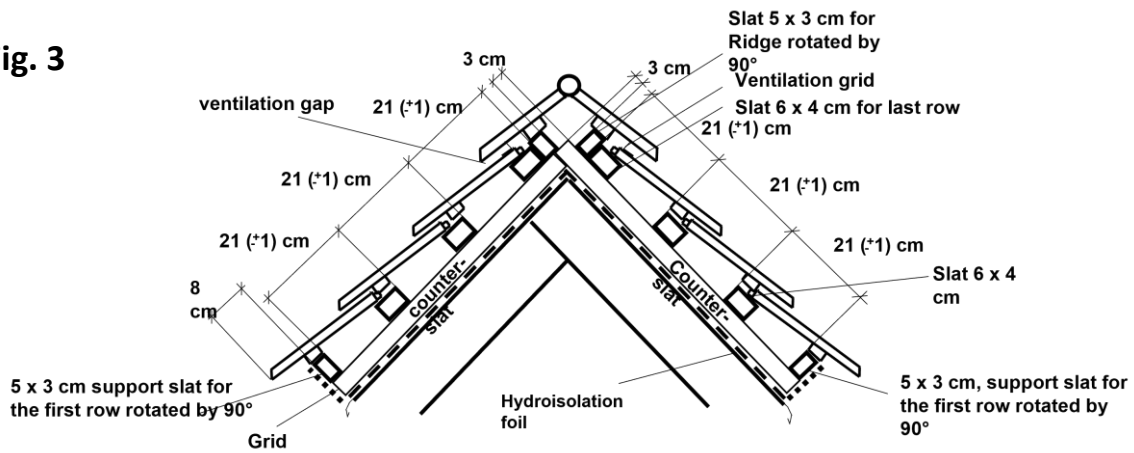

Producer: REGRA PLAST spol. s r.o., č.p. 197, Obora 440 01, email: info@eureko.org, tel. **777 242 062; www.eureko.org,**
REV: 001 14. 8. 2020

When laying on the slat, the slat of the upper mounting point of the lower pattern is also the slat of the lower mounting point of the pattern above it see. **Fig. 2 and Fig. 3**.

Dilatation

Roofing has enough space **in the water groove for dilatation see Fig. 4**. During laying, the individual patterns need to be slightly **pull**ed **away** to achieve sufficient dilatation, regardless of the weather and temperature. The bottom mounting hole must not touch the edge of the row template underneath.

Fig. 4

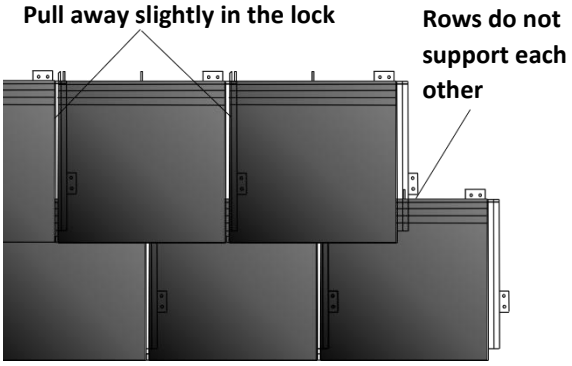

Footing

MODERNA assembly requires standard nails (FeZn, Cu, stainless steel) with a thickness of max. **2.8 mm** and **length of 32 mm**. The nail is always placed in the main mounting hole (). A spare mounting hole can also be used. If it is necessary to fix the roofing outside the space intended for this, we will do so with a self-tapping stainless steel screw without pre-drilling at the point of the roofing overlap. However, such interventions should be minimal, since the use of screws makes dilatation impossible.

Plumbing elements

The leeward slat shall be prepared from **two parts** (Fig. 5). At first, **part A** is mounted. After the pattern is established, **part B** is subsequently fixed to this part. This achieves that the template is held by plating even in a place where it cannot be attached in any other way. If the pattern cannot be mounted in the classic way, because under this place is part A of the leeward slat, **fix the template** with a screw at the **point of overlap** into the **adjacent pattern** (thus creating a wider tile) and also into the slat of the upper mounting hole. Make sure that the screw is outside part A of the leeward slat and also that it is **covered by** the **overlap of the higher row** pattern.

If the sheetwork lifts the tile, it is necessary to cut it so that the profile of the tile does not lift the roofing and at the same time does not prevent the outflow of water from the sheeting.

Sheeting in the gutter is standard as with other lightweight roofing. EUREKO MODERNA patterns are cut at the desired angle. Each pattern needs to be sufficiently fixed, as in the case of a leeward slat. Patterns **cannot be glued** to another substrate with silicone or polyurethane glue. The **effect of gluing** is only for a **short period**! Patterns must **always be anchored mechanically**, i.e. with a nail or screw.

Fig. 5

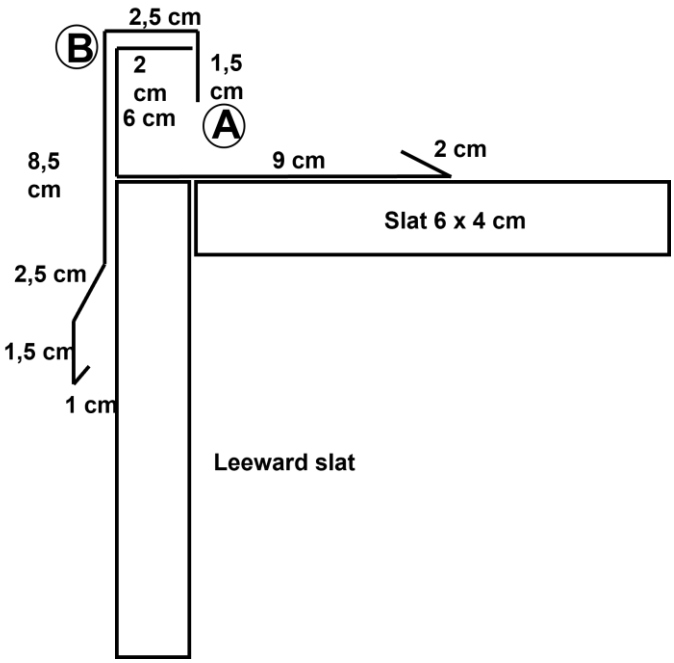

Ridge

The ridge includes two ridge patterns **EUREKO H1 and H2** – **marked together as UNIVERSAL RIDGE**. These patterns can be used at an **angle** of **15-50°**. The marking of each part is on the reverse side. The pattern for the ridge is approximately 3 cm from the end of the counter-slat. This slat for the ridge will be 5x3cm upright and it will be directly adjacent to the last slat for fixing the area, see. **Fig. 3.** This will create approximately **1 cm gap between the last row and the ridge** to be used as a ventilation of the roof cladding. When fixing the last row, **try to make the overlap as large as**

possible so that the grooves are hidden against water rising. We also install a **ventilation grid** in the upper part of the last tile, which we **cut as required**. If laying does not cover whole rows, it is necessary to consider shortening the last row.

However, in this case try to maintain maximum overlap. During the ridge assembly**, insert both pieces into each other**. The upper part of the ridge patterns includes a special **hinged lock** for this purpose, which enables the ridge to be used at different angles in variable application, as shown in Fig. 7.

Fig. 6

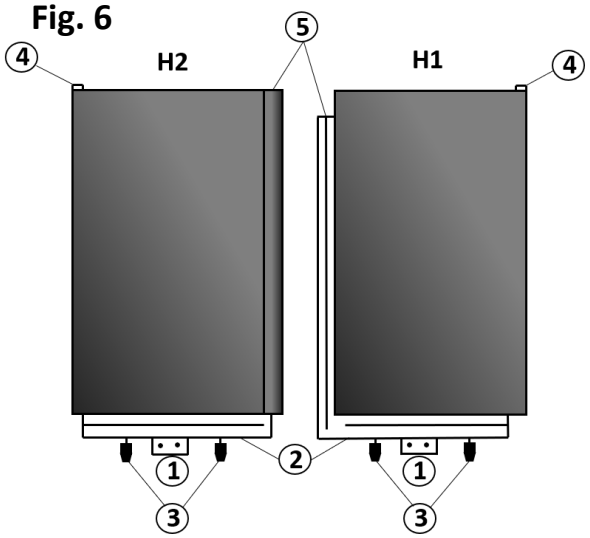

1) Mounting hole
2) Water groove
3) Support casting
4) Water groove lock
5) Articulated lock

Both parts of the ridge connected to each other are then **mounted in standard way** as well as EUREKO MODERNA patterns. **Fig. 6** describes the ridge in detail.

Fig. 7

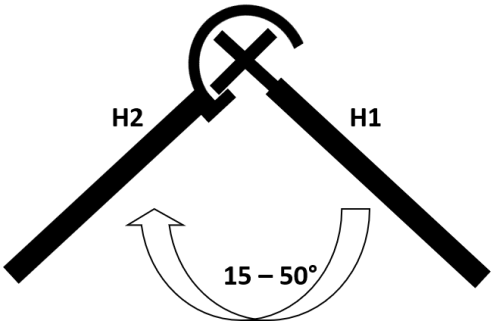

Auxiliary castings are placed next to the assembly holes. These castings are used to break off and attach to the rear (reverse) part of the ridge. After their application, the ridge will lean against the slat in other two points, which will make it more resistant for subsequent handling (e.g. Ladder support, etc.). For the exact location of the ridge and to maintain the plane, stretch a string under the ridge, or support it with a central slat.

Fig. 8

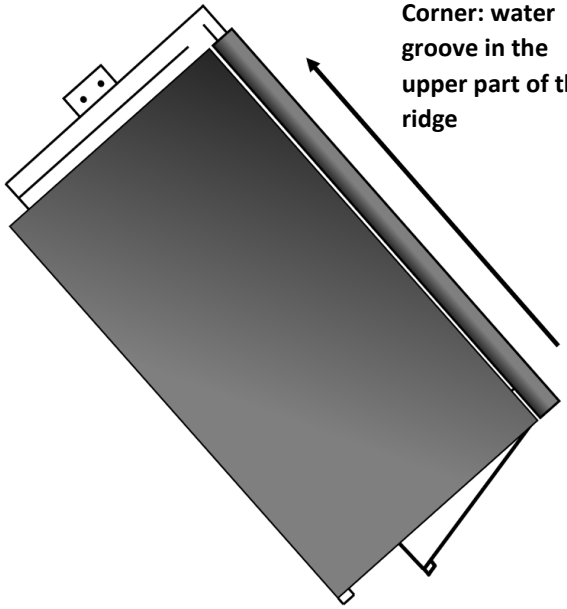

Corner: water groove in the upper part of the ridge

Corners

EUREKO DO H1 and H2 multi-purpose **ridges** are **also used** for the corners assembly **in the same way** as on the ridge. When installing the corners, it is necessary to lay the ridges from the bottom of the corner with a **water groove upwards** due to regular outflow of water, as shown in **Fig. 8**. Since the height of the slat will not match, it is necessary to attach the ridge in the corner and, according to the location of the mounting hole, **add 2.5 cm of slat** so that the ridge patterns have their location. The basic tiles are then cut up to this longitudinal slat, as shown in **Fig. 9**. We can also cut the existing

Obr. 9

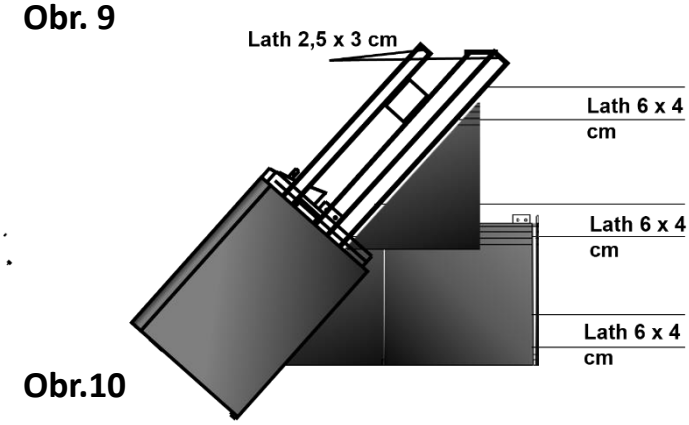

Obr.10

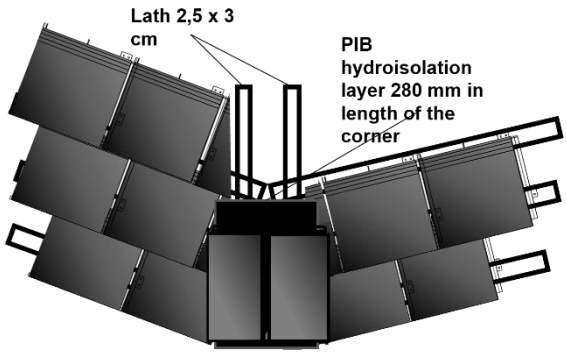

Obr. 11

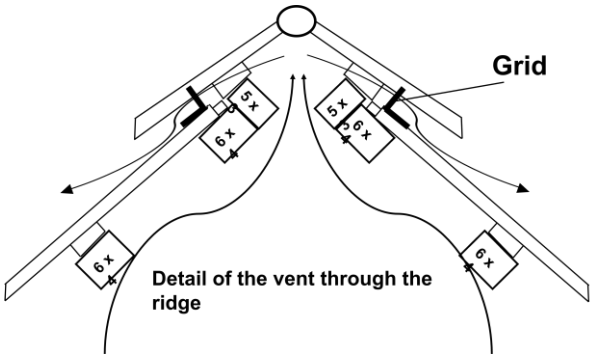

lats and add a slat from the side so that it protrudes just 2.5 cm. The corner must be additionally insulated and a polyisobutylene (PIB) strip with a width of 280 mm is laid over the slats on the cut patterns and at the same time hidden under the ridge tiles.

Ventilation of the roof cladding

The roof cladding is ventilated over the ridge by simple installation of raised slats at the **ridge**. These **slats 5 x 3 cm, rotated by 90°** create a ventilation gap about **1 cm high**. A **ventilation** grid is also installed under the ridge along the entire length. A detail of this ventilation is shown in Fig. 11. The slat under the ridge and the last slat are attached to **achieve the maximum possible overlap** at the ridge and to cover the grooves against water rising. Ventilation can also be created only on one side of the ridge.

www.eureko.org